This document has been translated from the Japanese-language original document for reference purposes only. In the event of any conflict or discrepancy between this document and the Japanese-language original, the Japanese-language original shall prevail in all respects.

November 25, 2026

To Whom It May Concern,

Company Name: KYUDEN Holdings Inc.
Representative: Member of the Board of Directors, President & Chief Executive Officer
Masaru Nishiyama
(Code: 642A–Tokyo Stock Exchange Prime Market/Fukuoka Stock Exchange)
Contact: Corporate Strategy Department
Chief Manager of Organizational Strategy Group
Masayuki Katayama
TEL: +81-92-984-4412

Notice Concerning Execution of Absorption-type Company Split Agreements and Change in Sub-subsidiaries in Connection with the Transition to a Pure Holding Company Structure

KYUDEN Holdings Inc. (the "Company") hereby announces that its Board of Directors, at a meeting held today, resolved to execute the absorption-type company split agreements for the company splits described in (1) and (4) below. In addition, Kyushu Electric Power Co., Inc. ("Kyushu Electric Power"), a wholly owned subsidiary of the Company, and Kyuden Mirai Energy Co., Inc. ("Kyuden Mirai Energy") and KYUDEN Urban Development Inc. ("KYUDEN Urban Development"), each a wholly owned subsidiary of Kyushu Electric Power, have also, at their respective Board of Directors meetings or otherwise, resolved or approved to execute the absorption-type company split agreements for the company splits described in (1) through (4) below, as outlined below.

(1) The succession by the Company, by way of an absorption-type company split, of the rights and obligations held by Kyushu Electric Power in connection with its financial management business (the "Interest-bearing Debt Absorption-type Split");

(2) The succession by Kyuden Mirai Energy, by way of an absorption-type company split, of the hydroelectric power generation business (conventional hydropower and pumped storage) of Kyushu Electric Power (the "Hydroelectric Business Absorption-type Split");

(3) The succession by KYUDEN Urban Development, by way of an absorption-type company split, of the urban development business of Kyushu Electric Power (the "Urban Development Business Absorption-type Split"); and

(4) The succession by the Company, by way of an absorption-type company split, of the rights and obligations held by Kyushu Electric Power in connection with its business of managing Group companies (the "Group Reorganization Split," and together with the Interest-bearing Debt Absorption-type Split, the Hydroelectric Business Absorption-type Split and the Urban Development Business Absorption-type Split, collectively, the "Company Splits").

As the Interest-bearing Debt Absorption-type Split and the Group Reorganization Split are company splits whereby the Company succeeds to businesses from its wholly owned subsidiary, and the Hydroelectric Business Absorption-type Split and the Urban Development Business Absorption-type Split are both company splits conducted between Kyushu Electric Power, a wholly owned subsidiary of the Company, and its wholly owned subsidiaries, certain disclosure items and details have been omitted from this disclosure.

Furthermore, as a result of the Group Reorganization Split, Kyushu Electric Power Transmission and Distribution Co., Inc. ("Kyuden T&D"), Kyuden Mirai Energy, Kyuden International Corporation ("Kyuden International"), QTnet, Inc. ("QTnet") and KYUDEN Urban Development, each currently a sub-subsidiary of the Company, will become wholly owned subsidiaries of the Company, which the Company hereby also announces.

Details

I. The Company Splits

1. Purpose of the Company Splits

As announced in the "Notice on Transition to a Holding Company Structure via Sole-Share Transfer" dated March 26, 2026, the Group determined that, on the fundamental premise of continuously improving nuclear safety, a holding company structure in which a holding company without its own business operations steers and supervises Group management is optimal for realizing "Group management from an overall optimization perspective" and "autonomous and prompt business operations." Accordingly, following approval at the General Meeting of Shareholders of Kyushu Electric Power held on June 25, 2026 and other procedures, the Company was established on October 1, 2026 through a sole share transfer by Kyushu Electric Power. Of the steps for the transition to the holding company structure set out in "3. Method and Procedures for Transition to the Holding Company Structure" of the above notice, the Company Splits will implement the transfer of interest-bearing debt, the transfer of related businesses and the reorganization of Group companies, which were to be carried out after the establishment of the Company, thereby completing the transition to the holding company structure.

The Interest-bearing Debt Absorption-type Split is intended to transfer the interest-bearing debt held by Kyushu Electric Power to the Company in order to establish a Group-wide financing structure under which the Company conducts fund-raising for the Group on a centralized basis, and to improve capital efficiency through the integration of fund-raising and debt repayment.

The Hydroelectric Business Absorption-type Split and the Urban Development Business Absorption-type Split will transfer the hydroelectric power generation business held by Kyushu Electric Power to Kyuden Mirai Energy and its urban development business to KYUDEN Urban Development, respectively, in order to establish a structure for autonomous and prompt business operations and to maximize business value.

The Group Reorganization Split will transfer to the Company the shares of Kyuden T&D, Kyuden Mirai Energy, Kyuden International, QTnet, KYUDEN Urban Development and Kraftia Corporation held by Kyushu Electric Power, in order to make the principal operating companies wholly owned subsidiaries of the Company.

2. Summary of the Company Splits

(1) Schedule of the Company Splits

(i) Date of resolution of the Board of Directors (Kyuden Mirai Energy)	November 19, 2026
(ii) Date of resolution of the Board of Directors (Kyushu Electric Power)	November 24, 2026
(iii) Date of approval of the absorption-type company split agreement (KYUDEN Urban Development)	November 24, 2026
(iv) Date of resolution of the Board of Directors (the Company)	November 25, 2026
(v) Date of execution of the absorption-type company split agreements - Agreement between the Company and Kyushu Electric Power - Agreement between Kyushu Electric Power and Kyuden Mirai Energy - Agreement between Kyushu Electric Power and KYUDEN Urban Development	November 25, 2026
(vi) Date of resolution of the General Meeting of Shareholders (Kyuden Mirai Energy)	November 25, 2026
(vii) Effective date of the absorption-type company split - Between the Company and Kyushu Electric Power (Interest-bearing Debt Absorption-type Split)	March 15, 2027 (scheduled)
(viii) Date of resolution of the General Meeting of Shareholders (KYUDEN Urban Development)	March 31, 2027 (scheduled)
(ix) Effective date of the absorption-type company splits - Between Kyushu Electric Power and Kyuden Mirai Energy (Hydroelectric Business Absorption-type Split) - Between Kyushu Electric Power and KYUDEN Urban Development (Urban Development Business Absorption-type Split) - Between the Company and Kyushu Electric Power (Group Reorganization Split)	April 1, 2027 (scheduled)

(Note) The Interest-bearing Debt Absorption-type Split and the Group Reorganization Split each constitute a simplified absorption-type split under Article 796, Paragraph 2 of the Companies Act for the Company, and a short-form absorption-type split under Article 784, Paragraph 1 of the Companies Act for Kyushu Electric Power. Accordingly, each of them will be conducted without holding a General Meeting of Shareholders to approve the Interest-bearing Debt Absorption-type Split or

the Group Reorganization Split.

In addition, the Hydroelectric Business Absorption-type Split and the Urban Development Business Absorption-type Split each constitute a simplified absorption-type split under Article 784, Paragraph 2 of the Companies Act for Kyushu Electric Power and will therefore be conducted without holding a General Meeting of Shareholders of Kyushu Electric Power.

(2) Method of the Company Splits

(i) Interest-bearing Debt Absorption-type Split

An absorption-type company split in which Kyushu Electric Power is the splitting company and the Company is the successor company.

(ii) Hydroelectric Business Absorption-type Split

An absorption-type company split in which Kyushu Electric Power is the splitting company and Kyuden Mirai Energy is the successor company.

(iii) Urban Development Business Absorption-type Split

An absorption-type company split in which Kyushu Electric Power is the splitting company and KYUDEN Urban Development is the successor company.

(iv) Group Reorganization Split

An absorption-type company split in which Kyushu Electric Power is the splitting company and the Company is the successor company.

(3) Details of allotment in connection with the Company Splits

(i) Interest-bearing Debt Absorption-type Split

No shares, cash or other consideration will be allotted in connection with the Interest-bearing Debt Absorption-type Split.

(ii) Hydroelectric Business Absorption-type Split

Kyuden Mirai Energy will allot and deliver 3,100,000 shares of its common stock to Kyushu Electric Power as consideration for the rights and obligations to be succeeded to in the Hydroelectric Business Absorption-type Split.

(iii) Urban Development Business Absorption-type Split

KYUDEN Urban Development will allot and deliver 1,600,000 shares of its common stock to Kyushu Electric Power as consideration for the rights and obligations to be succeeded to in the Urban Development Business Absorption-type Split.

(iv) Group Reorganization Split

No shares, cash or other consideration will be allotted in connection with the Group Reorganization Split.

(4) Treatment of share acquisition rights and bonds with share acquisition rights in connection with the Company Splits

Not applicable.

(5) Increase or decrease in capital stock due to the Company Splits

(i) Interest-bearing Debt Absorption-type Split

There will be no increase or decrease in the capital stock of the Company or Kyushu Electric Power as a result of the Interest-bearing Debt Absorption-type Split.

(ii) Hydroelectric Business Absorption-type Split

There will be no increase or decrease in the capital stock of Kyushu Electric Power or Kyuden Mirai Energy as a result of the Hydroelectric Business Absorption-type Split.

(iii) Urban Development Business Absorption-type Split

The capital stock of KYUDEN Urban Development will increase by JPY 95 million as a result of the Urban Development Business Absorption-type Split. There will be no increase or decrease in the capital stock of Kyushu Electric Power.

(iv) Group Reorganization Split

There will be no increase or decrease in the capital stock of the Company or Kyushu Electric Power as

a result of the Group Reorganization Split.

(6) Rights and obligations to be succeeded to by the successor companies

(i) Interest-bearing Debt Absorption-type Split

In accordance with the provisions of the absorption-type company split agreement for the Interest-bearing Debt Absorption-type Split executed with Kyushu Electric Power, the Company will succeed to, on the effective date, the rights and obligations held by Kyushu Electric Power in connection with its financial management business. The obligations will be assumed by the Company with Kyushu Electric Power released from those obligations.

(ii) Hydroelectric Business Absorption-type Split

In accordance with the provisions of the absorption-type company split agreement for the Hydroelectric Business Absorption-type Split executed with Kyushu Electric Power, Kyuden Mirai Energy will succeed to, on the effective date, the rights and obligations held by Kyushu Electric Power in connection with its hydroelectric power generation business. The obligations will be succeeded to by Kyuden Mirai Energy by way of assumption of obligations with release of Kyushu Electric Power.

(iii) Urban Development Business Absorption-type Split

In accordance with the provisions of the absorption-type company split agreement for the Urban Development Business Absorption-type Split executed with Kyushu Electric Power, KYUDEN Urban Development will succeed to, on the effective date, the rights and obligations held by Kyushu Electric Power in connection with its urban development business. The obligations will be succeeded to by KYUDEN Urban Development by way of assumption of obligations with release of Kyushu Electric Power.

(iv) Group Reorganization Split

In accordance with the provisions of the absorption-type company split agreement for the Group Reorganization Split executed with Kyushu Electric Power, the Company will succeed to, on the effective date, the rights and obligations held by Kyushu Electric Power in connection with its business of managing Group companies. The obligations will be assumed by the Company with Kyushu Electric Power released from those obligations.

(7) Prospects for the performance of obligations

The Company has determined that there are no issues with respect to the prospects for the performance of the obligations to be borne by the Company, Kyushu Electric Power, Kyuden Mirai Energy and KYUDEN Urban Development on and after the effective dates of the Company Splits.

3. Overview of the Parties to the Company Splits

(1) Splitting company (as of October 1, 2026)

(i) Name	Kyushu Electric Power Co., Inc.
(ii) Location	1-82 Watanabe-dori 2-chome, Chuo-ku, Fukuoka City
(iii) Title and name of representative	Norihiro Nakamura, Representative Director, President & Chief Executive Officer
(iv) Business description	Electric power business, etc.
(v) Capital stock	JPY 237,304 million
(vi) Date of establishment	May 1, 1951
(vii) Total number of issued shares	Common stock: 473,874,220 shares Class B preferred stock: 2,000 shares
(viii) Fiscal year end	March 31
(ix) Major shareholder and shareholding ratio	KYUDEN Holdings Inc.: 100%
(x) Financial position and operating results for the most recent fiscal year (fiscal year ended March 31, 2026; consolidated)	
Net assets	JPY 1,225,877 million
Total assets	JPY 5,983,340 million
Net assets per share	JPY 2,093.78
Net sales	JPY 2,247,214 million
Operating profit	JPY 224,853 million
Ordinary profit	JPY 207,059 million
Profit attributable to owners of parent	JPY 154,535 million
Basic earnings per share	JPY 314.65

(2) Successor companies (as of October 1, 2026)

(i) Name	KYUDEN Holdings Inc.	Kyuden Mirai Energy Co., Inc.	KYUDEN Urban Development Inc.
(ii) Location	1-82 Watanabe-dori 2-chome, Chuo-ku, Fukuoka City	KMG Bld., 2-23 Yakuin 3-chome, Chuo-ku, Fukuoka City	1-82 Watanabe-dori 2-chome, Chuo-ku, Fukuoka City
(iii) Title and name of representative	Masaru Nishiyama, Member of the Board of Directors, President & Chief Executive Officer	Koji Mine, Representative Director, President & Chief Executive Officer	Masanori Kozuma, Representative Director and President
(iv) Business description	Management of Group companies, etc.	Renewable energy business , etc.	Urban development business, etc.
(v) Capital stock	JPY 237,304 million	JPY 16,405 million	JPY 5 million
(vi) Date of establishment	October 1, 2026	July 1, 2014	October 1, 2026
(vii) Total number of issued shares	Common stock: 473,874,220 shares Class B preferred stock: 2,000 shares	Common stock: 1,306,206 shares	Common stock: 200 shares
(viii) Fiscal year end	March 31	March 31	March 31
(ix) Major shareholders and shareholding ratios	The Master Trust Bank of Japan, Ltd. (Trust Account): 13.9% Custody Bank of Japan, Ltd. (Trust Account): 5.1% Meiji Yasuda Life Insurance Company: 4.3% Kyuei-kai: 1.9% The Bank of Fukuoka, Ltd.: 1.8%	Kyushu Electric Power Co., Inc.: 100%	Kyushu Electric Power Co., Inc.: 100%
(x) Financial position and operating results for the most recent fiscal year (fiscal year ended March 31, 2026)			
Net assets	Not applicable, as the company was established on October 1, 2026.	JPY 40,343 million	Not applicable, as the company was established on October 1, 2026.
Total assets	—	JPY 116,127 million	—
Net sales	—	JPY 25,420 million	—
Operating profit	—	JPY 4,659 million	—
Ordinary profit	—	JPY 4,175 million	—
Net income	—	JPY 3,001 million	—

4. Overview of the Business Divisions to Be Succeeded

(1) Description of the businesses of the divisions to be succeeded

Successor company	Description of the business of the division to be succeeded
KYUDEN Holdings	Business of managing Group companies and financial management business
Kyuden Mirai Energy	Hydroelectric power generation business
KYUDEN Urban Development	Urban development business

(2) Operating results of the divisions to be succeeded (fiscal year ended March 31, 2026)

Business to be succeeded	Net sales of the business to be succeeded
Business of managing Group companies and financial management business	No net sales are generated by these divisions.
Hydroelectric power generation business	JPY 88,746 million
Urban development business	JPY 2,825 million

(Note) Figures represent net sales to external customers.

(3) Items and book values of assets and liabilities to be succeeded

(i) Assets and liabilities to be succeeded to by the Company (Interest-bearing Debt Absorption-type Split)

Assets		Liabilities	
Item	Amount	Item	Amount
Non-current assets	JPY 1,732.4 billion	Non-current liabilities	JPY 2,441.6 billion
Current assets	JPY 1,161.2 billion	Current liabilities	JPY 452.0 billion
Total	JPY 2,893.6 billion	Total	JPY 2,893.6 billion

(ii) Assets and liabilities to be succeeded to by Kyuden Mirai Energy (Hydroelectric Business Absorption-type Split)

Assets		Liabilities	
Item	Amount	Item	Amount
Non-current assets	JPY 341.1 billion	Non-current liabilities	JPY 186.5 billion
Current assets	JPY 34.3 billion	Current liabilities	JPY 32.4 billion
Total	JPY 375.5 billion	Total	JPY 219.0 billion

(iii) Assets and liabilities to be succeeded to by KYUDEN Urban Development (Urban Development Business Absorption-type Split)

Assets		Liabilities	
Item	Amount	Item	Amount
Non-current assets	JPY 119.4 billion	Non-current liabilities	JPY 38.0 billion
Current assets	JPY 7.0 billion	Current liabilities	JPY 6.2 billion
Total	JPY 126.4 billion	Total	JPY 44.2 billion

(iv) Assets and liabilities to be succeeded to by the Company (Group Reorganization Split)

Assets		Liabilities	
Item	Amount	Item	Amount
Non-current assets	JPY 596.4 billion	Non-current liabilities	JPY 551.9 billion
Current assets	JPY 68.8 billion	Current liabilities	JPY 113.3 billion
Total	JPY 665.2 billion	Total	JPY 665.2 billion

(Note 1) The amounts for the Interest-bearing Debt Absorption-type Split have been calculated based on the balance sheet as of March 31, 2026; accordingly, the amounts actually to be succeeded to will reflect increases and decreases up to the day immediately preceding the effective date (March 15, 2027).

(Note 2) The amounts for the Hydroelectric Business Absorption-type Split and the Urban Development Business Absorption-type Split have been calculated based on the balance sheet as of March 31, 2026, taking into account the amounts for the Interest-bearing Debt Absorption-type Split; accordingly, the amounts actually to be succeeded to will reflect increases and decreases up to the day immediately preceding the effective date (April 1, 2027).

(Note 3) The amounts for the Group Reorganization Split have been calculated based on the balance sheet as of March 31, 2026, taking into account the amounts for the Interest-bearing Debt Absorption-type Split, the Hydroelectric Business Absorption-type Split and the Urban Development Business Absorption-type Split; accordingly, the amounts actually to be succeeded to will reflect increases and decreases up to the day immediately preceding the effective date (April 1, 2027).

5. Status after the Company Splits (as of April 1, 2027 (scheduled))

There will be no change in the name, location, title and name of representative, business description, capital stock or fiscal year end of Kyushu Electric Power, the splitting company. The status of the successor companies will be as follows.

	KYUDEN Holdings Inc.	Kyuden Mirai Energy Co., Inc.	KYUDEN Urban Development Inc.
Capital stock	No change	No change	JPY 100 million

(Note) There will be no change in the name, location, title and name of representative, business description or fiscal year end of the successor companies.

6. Future Outlook

As each of the Company Splits is a company split conducted between the Company and its wholly owned subsidiary or between consolidated subsidiaries of the Company, the impact of the Company Splits on the Company's consolidated financial results will be minor.

II. Change in Sub-subsidiaries

1. Reason for and method of the change

As a result of the Group Reorganization Split, all of the shares of Kyuden T&D, Kyuden Mirai Energy, Kyuden International, QTnet and KYUDEN Urban Development held by Kyushu Electric Power will be succeeded to by the Company, and Kyuden T&D, Kyuden Mirai Energy, Kyuden International, QTnet and KYUDEN Urban Development will accordingly become wholly owned subsidiaries of the Company.

2. Overview of the sub-subsidiaries subject to the change

(i) Name	Kyushu Electric Power Transmission and Distribution Co., Inc.	Kyuden International Corporation	QTnet, Inc.
(ii) Location	1-82 Watanabe-dori 2-chome, Chuo-ku, Fukuoka City	KMG Bld., 2-23 Yakuin 3-chome, Chuo-ku, Fukuoka City	12-20 Tenjin 1-chome, Chuo-ku, Fukuoka City
(iii) Title and name of representative	Hiroshi Imamura, Representative Director and President	Takashi Mitsuyoshi, Representative Director and President	Yoshio Ogura, Representative Director, President & Chief Executive Officer
(iv) Business description	General electricity transmission and distribution business, power generation business on remote islands, etc.	Overseas energy business, etc.	Telecommunications business, etc.
(v) Capital stock	JPY 20.0 billion	JPY 64.4 billion	JPY 22.0 billion

(Note) For Kyuden Mirai Energy and KYUDEN Urban Development, please refer to "I. The Company Splits, 3. Overview of the Parties to the Company Splits, (2) Successor companies (as of October 1, 2026)" above.

3. Schedule of the change(scheduled)

Date of change: April 1, 2027 (the effective date of the Group Reorganization Split)

End

(Reference 1) Structure of the KYUDEN Group after the Company Splits

October 1, 2026

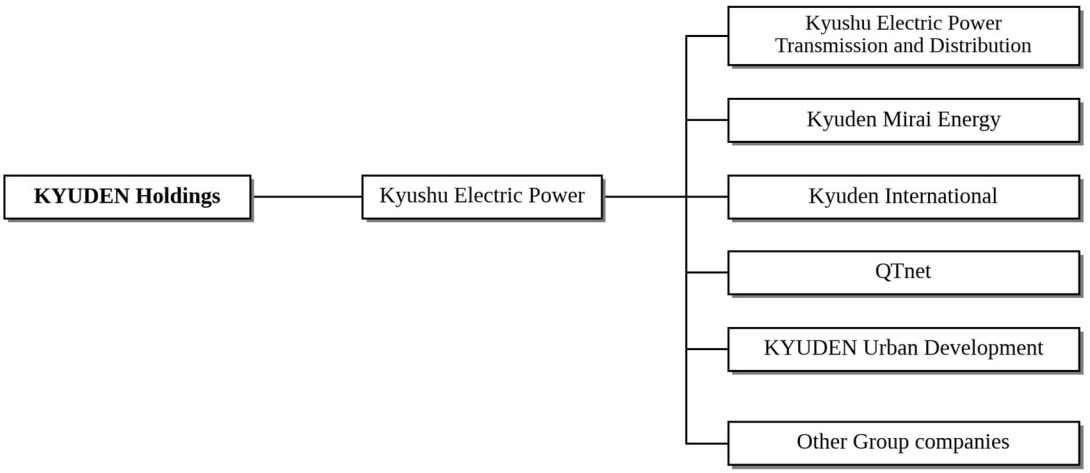

April 1, 2027

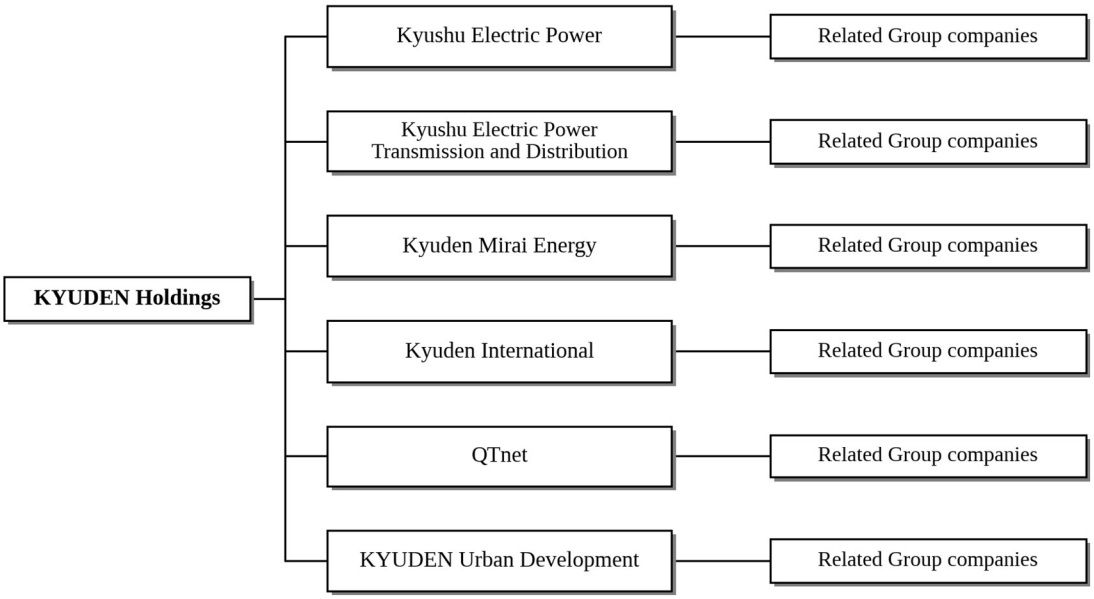

(Reference 2) Consolidated earnings forecast for the current fiscal year and consolidated results for the previous fiscal year

	Net sales	Operating profit	Ordinary profit	Profit attributable to owners of parent
Forecast for the current fiscal year (fiscal year ending March 31, 2027)	JPY 2,550,000 million	JPY 240,000 million	JPY 200,000 million	JPY 140,000 million
Results for the previous fiscal year (fiscal year ended March 31, 2026)	JPY 2,247,214 million	JPY 224,853 million	JPY 207,059 million	JPY 154,535 million

End

Treatment of Existing Interest-bearing Debt in Connection with the Transition to a Pure Holding Company Structure

In connection with the transition to a pure holding company structure, the Company plans to assume the existing interest-bearing debt owed by Kyushu Electric Power Co., Inc. ("Kyushu Electric Power"), a wholly owned subsidiary of the Company, by way of a company split (the "Company Split").

In implementing the Company Split, the Company plans to protect creditors' rights by extending a loan from the Company to Kyushu Electric Power (an "ICL" (Inter-Company Loan)) and utilizing the "Enterprise Value Charge," a new security framework, as described below (collectively, the "Scheme"). Through these initiatives, the Company will continue to seek to enhance the corporate value of the Group.

With respect to the performance and protection of the obligations relating to domestic publicly offered bonds included in the existing interest-bearing debt borne by Kyushu Electric Power, Kyushu Electric Power held prior consultations with Mizuho Bank, Ltd., the bond administrator, and has determined that the adoption of the Scheme will ensure the same level of performance and protection as before the Company Split.

Details

[Mechanism for protecting the rights of creditors]

On the effective date of the Company Split, Kyushu Electric Power will owe the Company an amount under the ICL corresponding to the existing interest-bearing debt assumed by the Company. Accordingly, the funds required for the payment of principal and interest on the existing interest-bearing debt will be provided through the corresponding payments of principal and interest under the ICL.

In addition, with respect to the statutory preferential rights attached to a portion of the existing interest-bearing debt, to maintain a level of security protection equivalent to that before the Company Split, Enterprise Value Charges will be created over (i) the Company's entire assets to secure the interest-bearing debt secured by the statutory preferential rights and (ii) Kyushu Electric Power's entire assets to secure the ICL.

Holders of domestic publicly offered bonds will not be required to complete any administrative procedures in connection with the implementation of the Scheme.

[Overview of the Scheme]

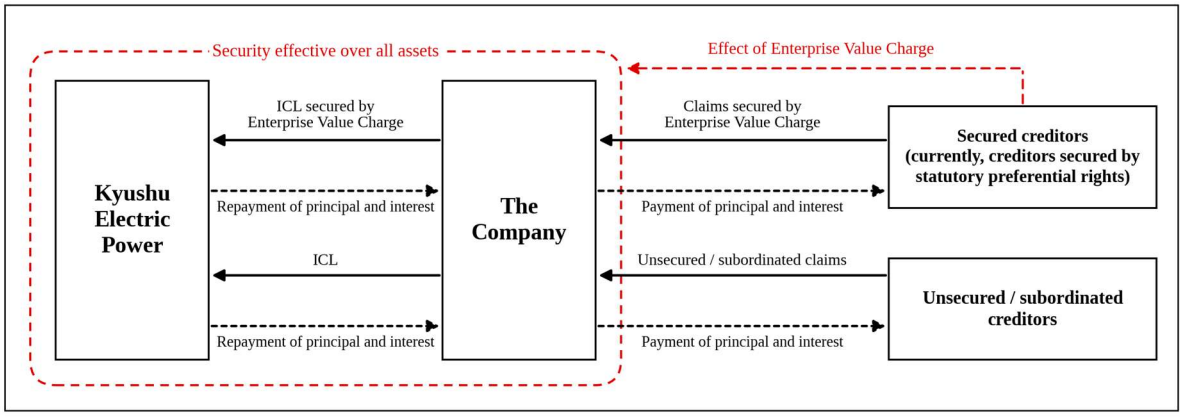

(Reference) About the Enterprise Value Charge

- The Enterprise Value Charge is a new type of security interest under Japanese law over a company's entire assets, with the aim of facilitating the raising of funds necessary for the company's business and thereby supporting the continuation, growth and development of that business. Special provisions are also in place for its use in connection with bonds, making it possible to ensure the same level of bondholder protection as the statutory preferential rights permitted under the Electricity Business Act.

- Discussions toward the creation of the Enterprise Value Charge began around 2020, and it is provided for in the Act on the Promotion of Cash Flow-Based Lending, enacted in June 2024 (effective May 25, 2026).

End